BioScan Robot Assembly and Integration

Diego Mendez, Kylen Littlehat, Dr. Jacob Kimball
Department of Biomedical and Electrical Engineering

UP SHILEY SCHOOL OF ENGINEERING

Introduction

This innovative, driven project combines biomedical and electrical engineering principles to develop a low-power BioScan Robot that is capable of taking real-time vitals, providing a diagnosis. To achieve this, multiple functions have to run in parallel, such as measuring heart rate, body temperature, and robot navigation. The project has high potential to boost automated healthcare.

BioScan Robot Function

The BioScan Robot is designed to autonomously collect a person's vital signs without requiring direct control. It integrates thermal imaging, radar tracking, and microphone sensors to monitor body temperature, heart rate, and voice commands in real time. Through Bluetooth connectivity and onboard processing, the robot can operate independently while communicating diagnostic data to external devices.

Sensor Systems

Currently the robot has voice recognition predefined commands like 'go', 'stop', 'left', and 'right'.

When a Bluetooth device is connected the system will move forward. Working towards directionality.

The thermal camera captures images resulting in a confidence score to determine how reliable an image is.

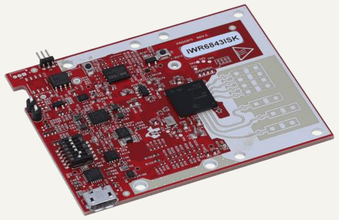

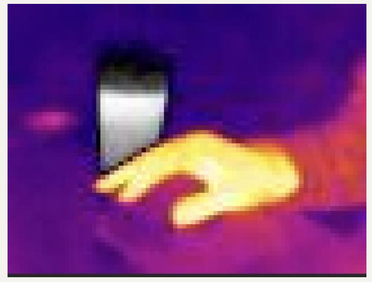

Radar + Thermal Imaging

Current Development

Current Objective

•We are developing a scalable robotic system that runs on multiple Raspberry Pi 4 units operating in parallel.

•One Pi currently manages the core systems, while additional Pi's will be implemented to handle sensing, communication, and control tasks.

•Parallel Python processes will coordinate these modules, improving efficiency, responsiveness, and reliability.

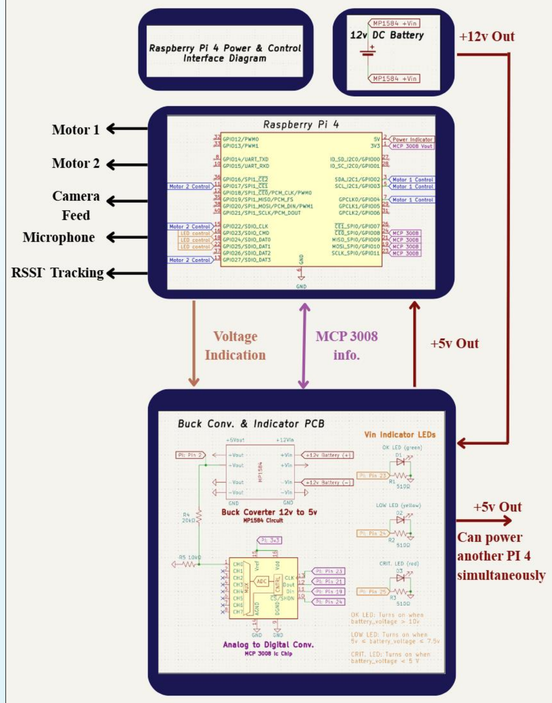

Buck Converter & Indicator PCB

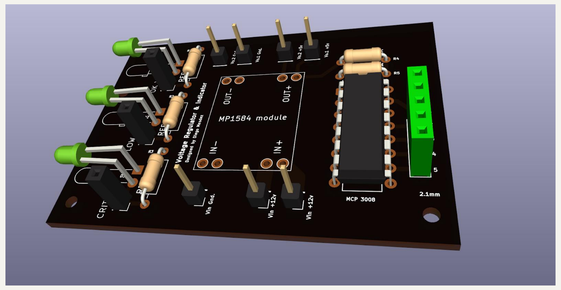

Python Code Iteration 1

4x Python Scripts, 1x Raspberry Pi 4

motor_control.py: Motors
battery_monitor.py: LDs/Battery
sensor_reader.py: Sensors
data_tracking.py: Logging

Python Code Iteration 2

1x Python Script, 1x Raspberry Pi 4

Process 1: Motor Control
Process 2: Battery Monitor
Process 3: Sensor Reader
Process 4: Data Logger

Python Code Iteration 3

1x Python Script, 2x Raspberry Pi 4

Raspberry Pi 1:
motor_control.py:Motors
battery_monitor.py: LEDs/Battery

Simplifying Power Distribution

A 12v battery is stepped down to 5v with an MP1584 buck converter to power the Pi's and sensors. The MCP3008 chip measures voltage and drives LEDs showing battery status (OK, Low, Critical). This setup ensures stable, monitored power for all components.

Full-System Assembly

Sensor and Detection Systems

+

Processing and Control Hardware

+

Mobility System

Future Innovations

Circular Bumper and Impact Response System

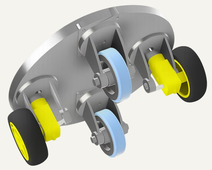

A circular bumper system will be implemented to allow the robot to respond dynamically to physical contact. The bumper uses spring-loaded force-sensitive sensors to detect impacts and trigger the robot to reverse or change direction accordingly. This design will be tested both in simulation using Fusion 360 and through real-world experiments to evaluate responsiveness and mechanical reliability.